UnleashingUVM™

PACKET PARSER (FOUR PORTS)

Copyright 2013, www.cvcblr.com

REVISION 1.1

- The packet length is fixed to 10, i.e. 10 chunks of 64-bits or 80 bytes.
- This version contains four input & four output data ports.
- No error signaling mechanism.

Copyright 2013, www.cvcblr.com

BLOCK DIAGRAM:

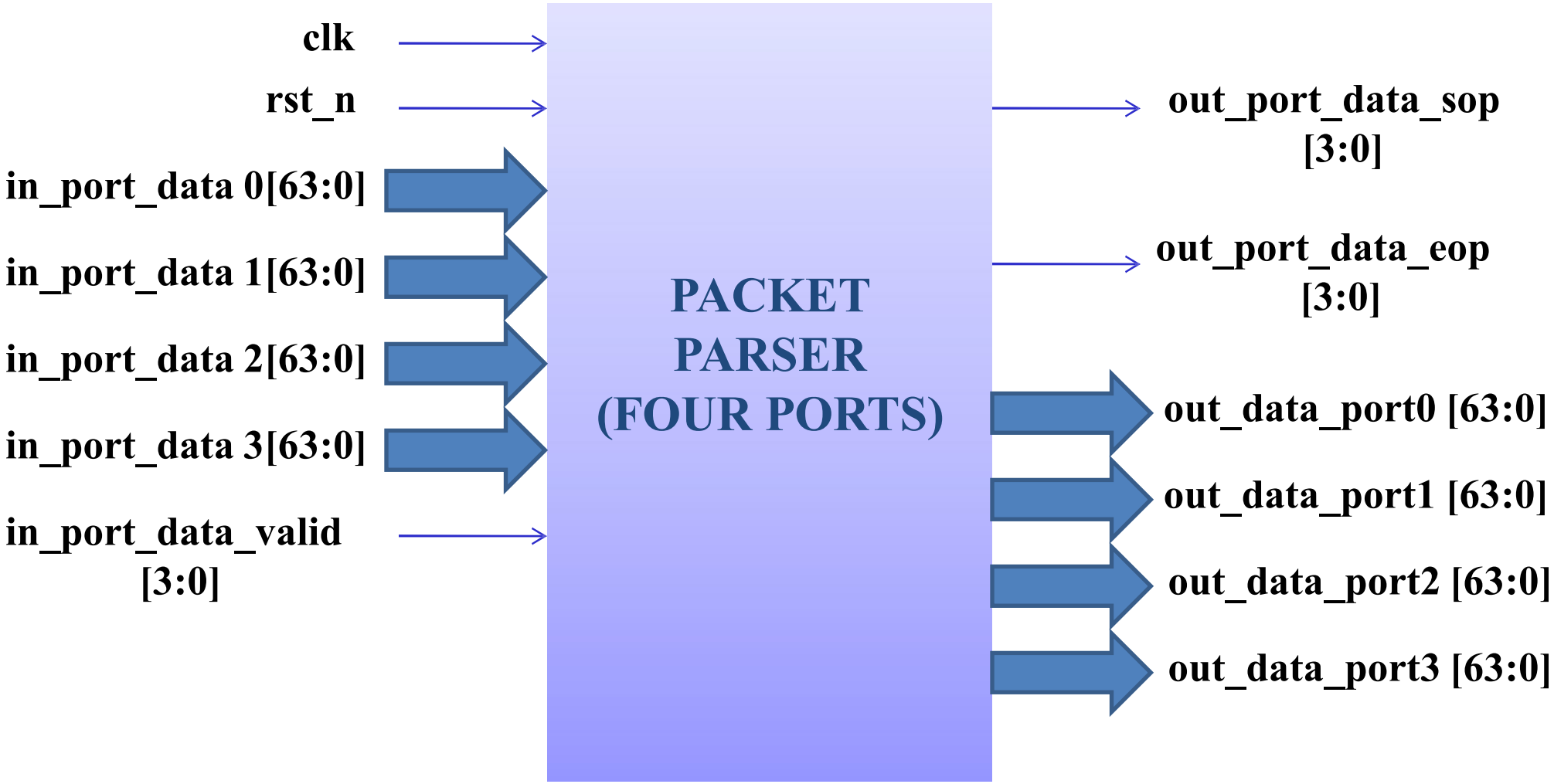

Copyright 2013, www.cvcblr.com

SIGNAL DESCRIPTION:

Signal	Width	Direction	Description
clk	1 bit	Input	Clock input
rst_n	1 bit	Input	Active low, asynchronous reset
in_port_data0, in_port_data1, in_port_data2, in_port_data3	64 bits each	Inputs	Data inputs
in_port_data_valid [3:0]	4 bits	Input	Validate input data
out_port_data0, out_port_data1, out_port_data2, out_port_data3	64 bits each	Outputs	Data outputs

Copyright 2013, www.cvcblr.com

SIGNAL DESCRIPTION:

Signal	Width	Direction	Description
out_port_data_sop [3:0]	4 bits	Output	Indicates start of packet for output data
out_port_data_eop [3:0]	4 bits	Output	Indicates end of packet for output data

Copyright 2013, www.cvcblr.com

DESCRIPTION:

- The Four Ports Packet Parser receives input packets from “in_port_data0”, “in_port_data1”, “in_port_data2”, “in_port_data3” in the form of 64 bits chunks, stores them in internal registers until the complete packet has been received and then sends the packets to “out_port_data0”, “out_port_data1”, “out_port_data2”, “out_port_data3” respectively, again as 64 bits chunks.

- The “rst_n” signal is active low and asynchronous. When it is asserted, “out_port_data_sop [3:0]”, “out_port_data_eop [3:0]” and “out_port_data0”, “out_port_data1”, “out_port_data2”, “out_port_data3” are zero.

- The packet length is 10 (i.e. ten 64-bits chunks per packet).

- The signal “in_port_data_valid [3:0]” is active high and its de-assertion represents that one complete packet has been received through the corresponding input port.

Copyright 2013, www.cvcblr.com

DESCRIPTION (CONTD..):

- When "in_port_data_valid" is de-asserted, at the next positive edge of clock, the corresponding "out_port_data_sop" is asserted for one clock cycle in which the first 64 bits chunk of the packet, that was received through the input port, is sent to the corresponding output port.

- After the sop cycle, the rest of the chunks of the packet are sent to the output ports.

- The signal "out_port_data_eop [3:0]" is asserted for one clock cycle in which the last chunk of the packet is sent to the output port.

- The output ports hold zero if no input packets are received.

- The "in_port_data_valid" signal for any port, should not be asserted again until all the chunks of the previous packet have been sent to the corresponding output port.

Copyright 2013, www.cvcblr.com

MICRO ARCHITECTURE DESCRIPTION:

- 4 FIFO registers are required to hold the input packet chunks (64-bits each).
- Depth of each FIFO is 16.
- When "in_port_data_valid" signal for a port is asserted , then for ten subsequent clock cycles, the input packet chunks will be pushed into the corresponding FIFO register. The "in_port_data_valid" signal will be connected to the push input of FIFO register.
- The "in_port_data" signal will be connected to the data input of FIFO register.
- When all the ten chunks of a packet have been pushed into the FIFO register, then from the next positive edge of clock, these packet chunks will be popped out from FIFO and will be routed to the corresponding output port.
- The output "data_out" from FIFO will be zero when "rst_n" is low or when push operation is being performed.

Copyright 2013, www.cvcblr.com

MICRO ARCHITECTURE DESCRIPTION:

- Four edge marker blocks, along with some glue logic, are used to help generate the "out_port_data_sop [3:0]" and "out_port_data_eop [3:0]" signals.
- The pop input of FIFO is also generated by the glue logic block, as shown in the detailed block diagram.

Copyright 2013, www.cvcblr.com

DETAILED BLOCK DIAGRAM (FOR SINGLE PORT):

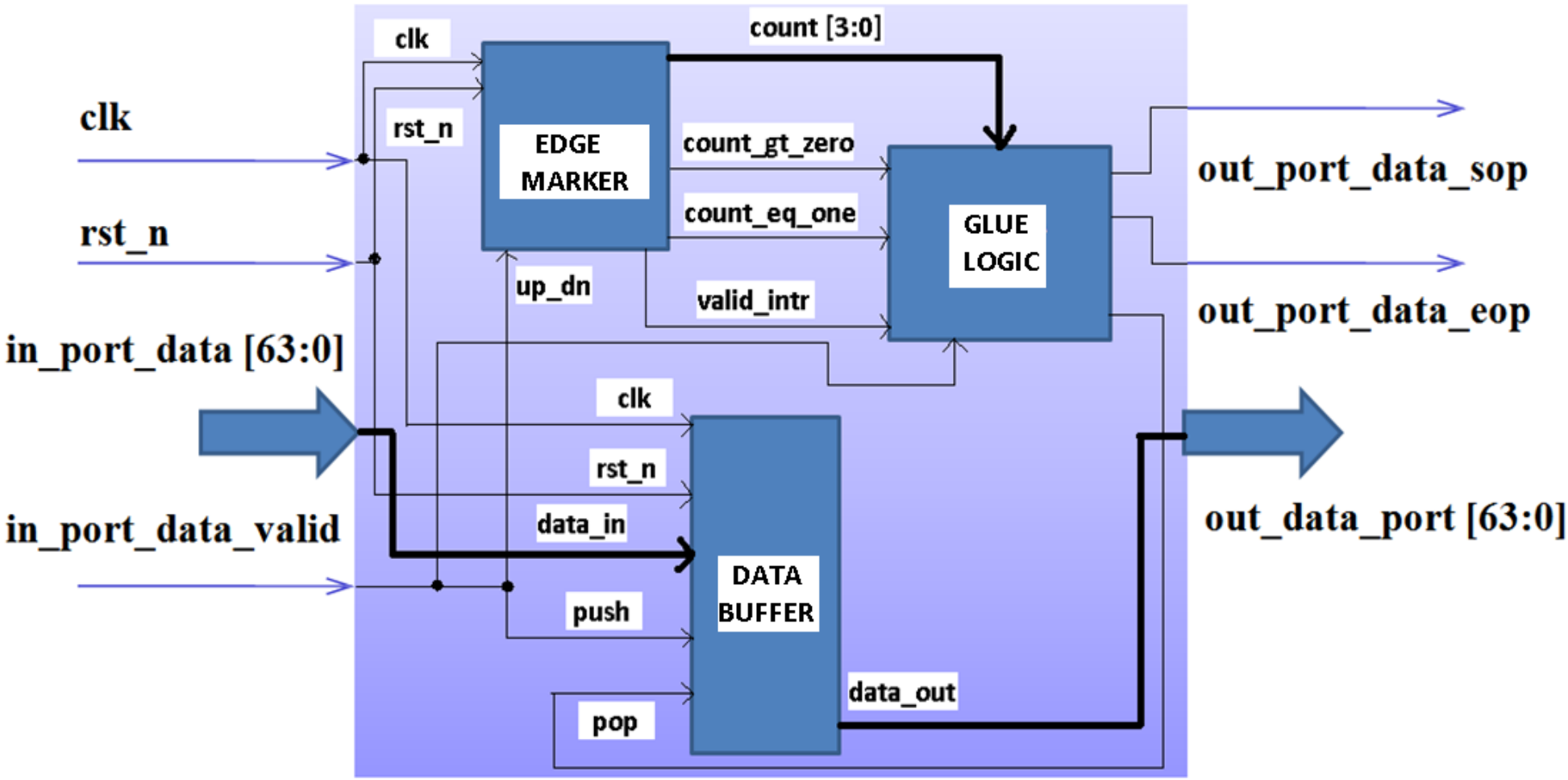

Copyright 2013, www.cvcblr.com

DETAILED BLOCK DIAGRAM (FOR FOUR PORT):

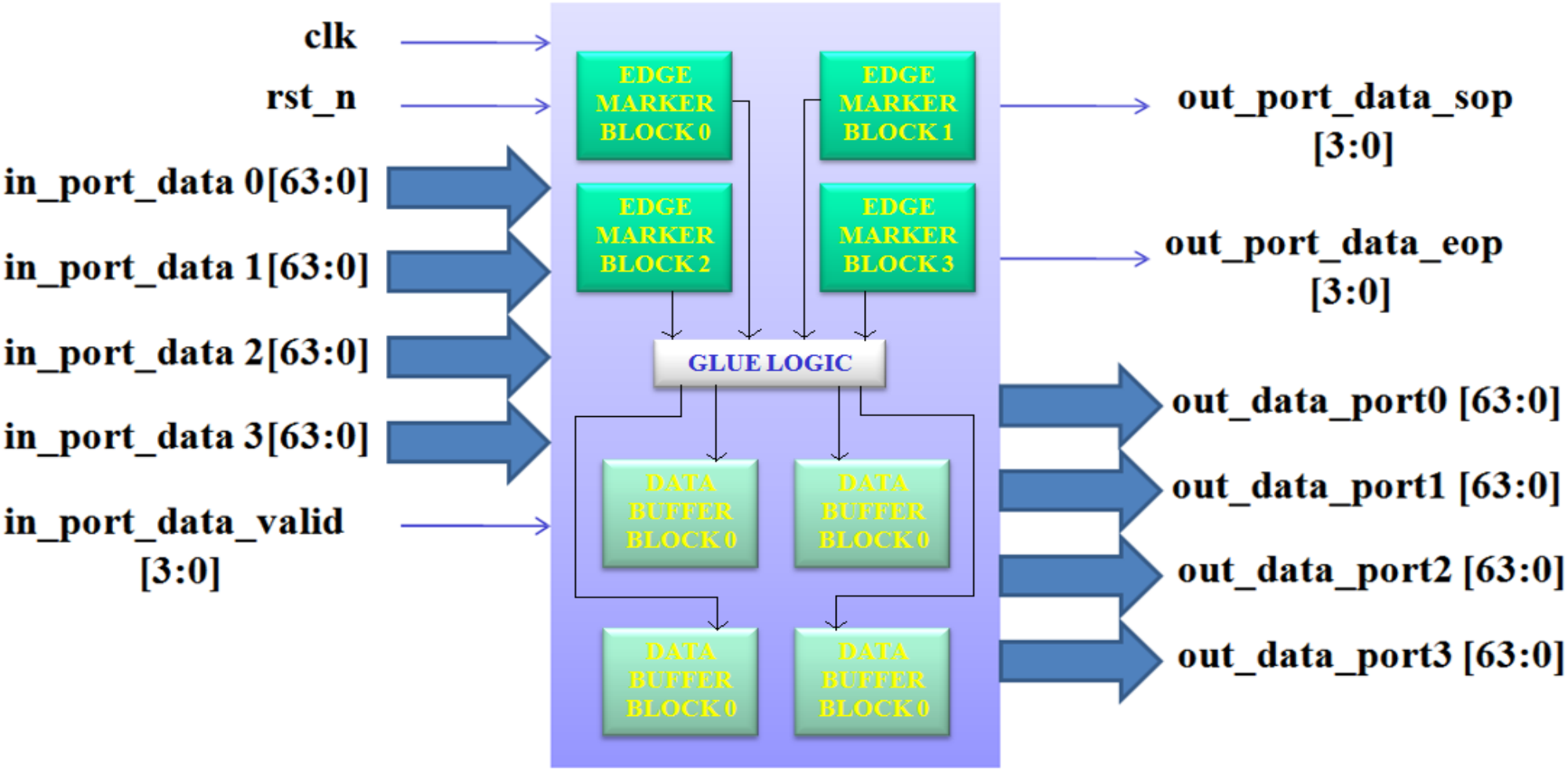

Copyright 2013, www.cvcblr.com

TIMING DIAGRAM (SINGLE PORT):

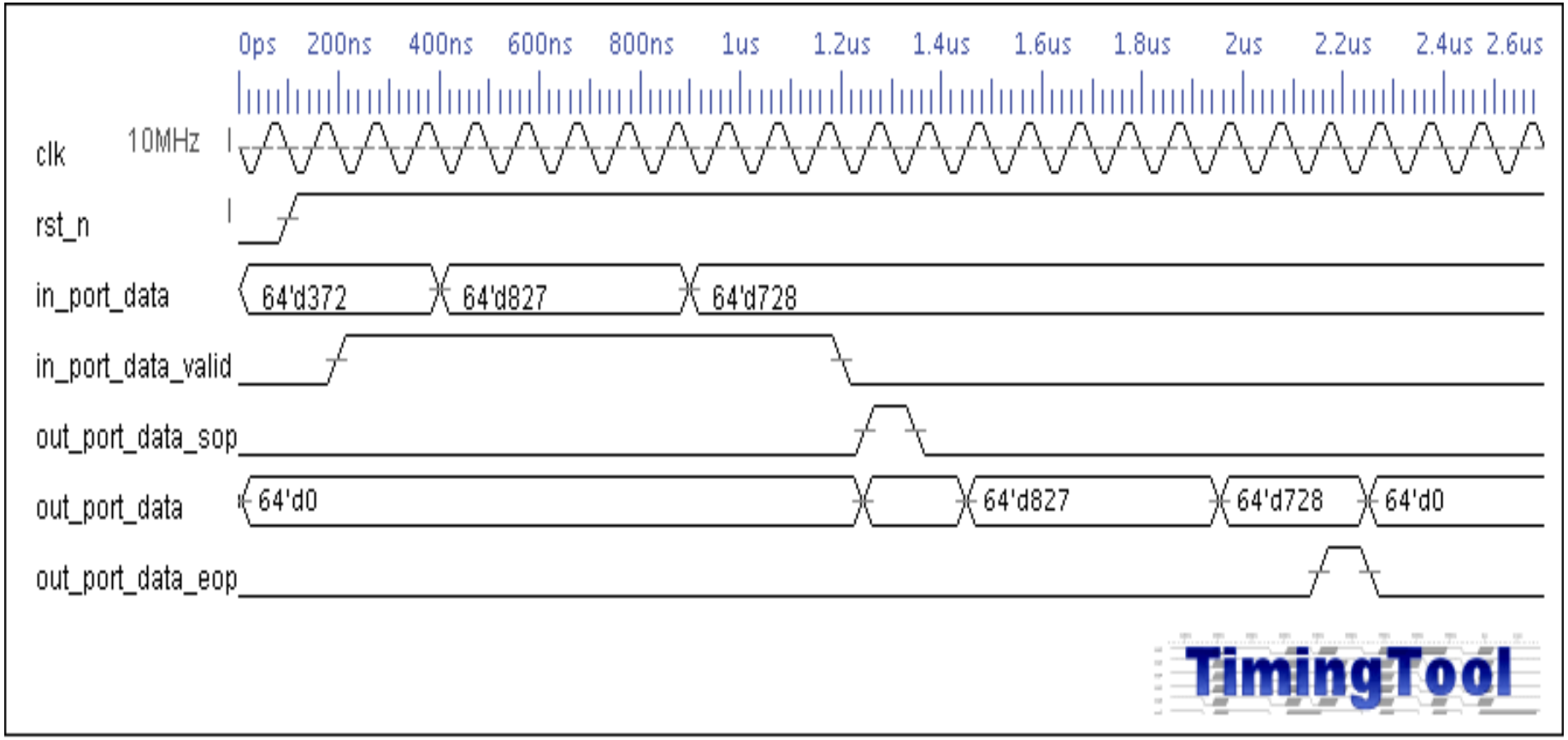

Copyright 2013, www.cvcblr.com

Unleashing UVM™

TIMING DIAGRAM (FOUR PORTS):

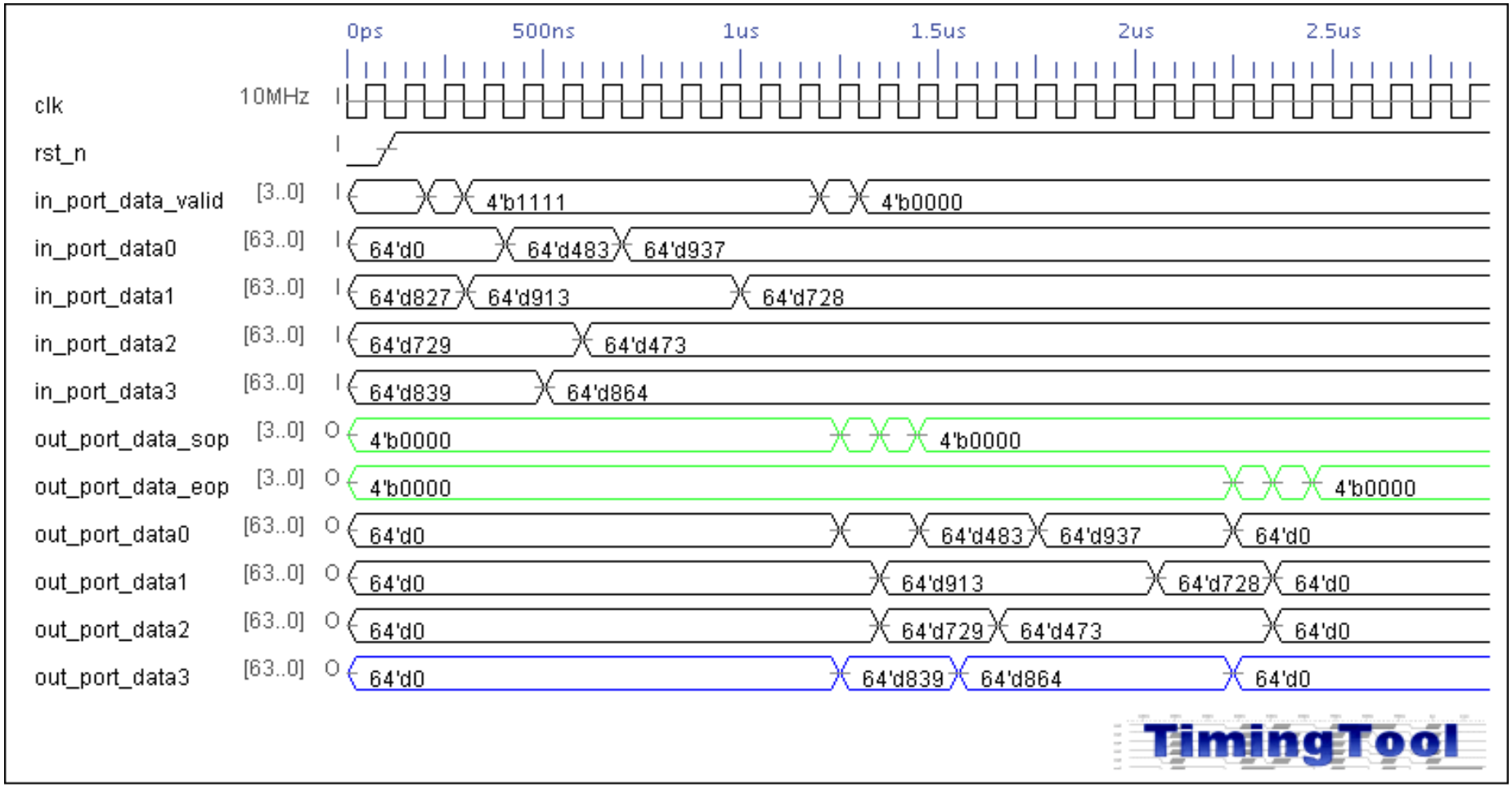

Copyright 2013, www.cvcblr.com